Canadian Victory Garden

Overview of an Off Grid Solution

created by

Foundation for Building Sustainable Communities (FBSC)

Part One: Background on Canadian Victory Garden

Part Two: Brainstorming Session-April 2015

Part Three: Recommendations

Part Four: Implementation-July/Aug 2016

Part Five: Final Specifications

The Canadian Victory Garden:

- Based on the historic British First World War ‘*Dig In*’ Campaign promoting growing food, self sufficiency and citizen engagement.
- To promote healthy eating with locally grown vegetables
- Located on six acre
- Greenhouse with off the grid demonstration project, a Shed with Solar panels, underground piping, irrigation system, lighting and connected to the water storage tanks.

The next phase is to create a MESH Network, in collaboration with the

FBSC.ORG
FOUNDATION FOR BUILDING
SUSTAINABLE COMMUNITIES

Methodology

Organize a learning opportunity for Energy systems with UOIT students and IEEE Toronto members by:

- Facilitated brainstorming session to set group knowledge and assess current energy needs with the end user input
- Analysis of best practices and appropriate solutions through a team approach

Glenn McKnight, Project Coordinator

Technical Coordinator for CVG

Active in IEEE HTC since 2009, IEEE Toronto Sight Chairman

Member of the Northshore Amateur Radio Club

Joan Kerr, Executive Director

Founder of the Foundation for Building Sustainable Communities
Canadian Victory Garden

Robert T. Bell,

Sales Representative: Coldwell Banker 2M Realty Brokerage

Owner Operator: Durham Metal Detectors

Member of the North Shore Amateur Radio Club

Miral Chachan

-Graduate of UOIT Engineering programme

-Coordinator, UOIT Engineering student volunteers for the Brainstorming session

Butch Shadwell, Technical Advisor

A senior member of the IEEE, he is active on the IEEE Energy Policy Committee and the IEEE Research Policy Committee.

In 2009 he was selected as the international chair of the IEEE Humanitarian Technology Challenge – Reliable Electricity.

He has conducted sponsored research at Carnegie-Mellon Robotics Institute and received over $1.5 million in grants for his work in machine vision.

FBSC.ORG
FOUNDATION FOR BUILDING SUSTAINABLE COMMUNITIES

FBSC.ORG
FOUNDATION FOR BUILDING SUSTAINABLE COMMUNITIES

- Facilitated session by Butch Shadwell to provide relevant background before site investigation
- Field trip, analysis, measurements, client interviews
- Decision to adapt conceptual off grid power source
- Division of group into small working teams allocated to specific task

gr

Issues to be addressed

- Climate control
- Lighting
- Water / Irrigation
- Community engagement

Additional Requirements

-Energy Load calculations

-Battery losses

-Daylight hours

-Water requirements

-Aesthetics and security

-Community involvement

Breakdown

Each group presented their findings addressing:

- Fan and exhausts
- Floodlight and LED lighting
- Pumps and allocated loads

Recommendations

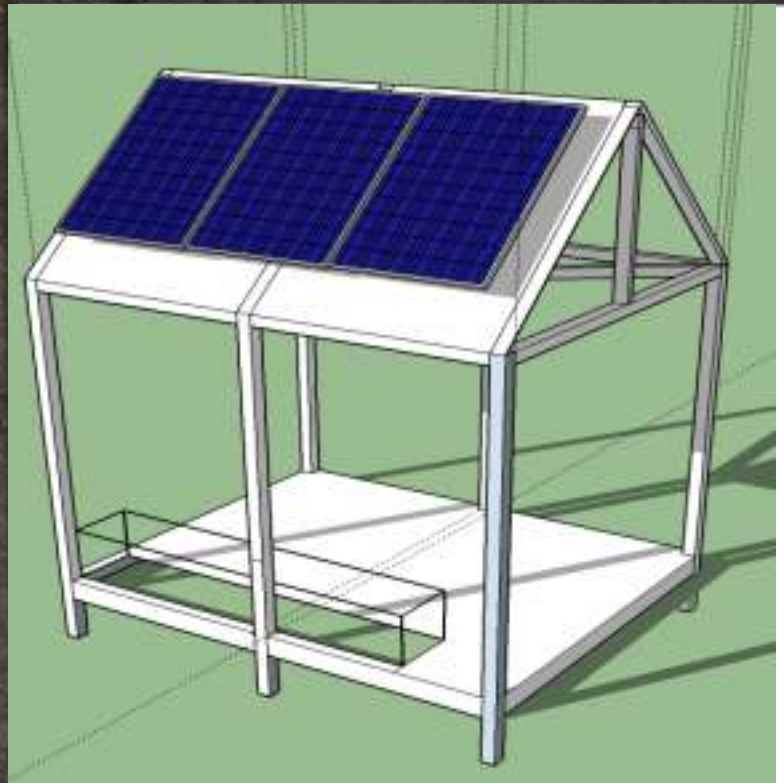

Solar Shed Conceptual Design

- 300 watt panels
- Sitting area with box for batteries, controller, inverter etc

Earth Energy Conceptual Design

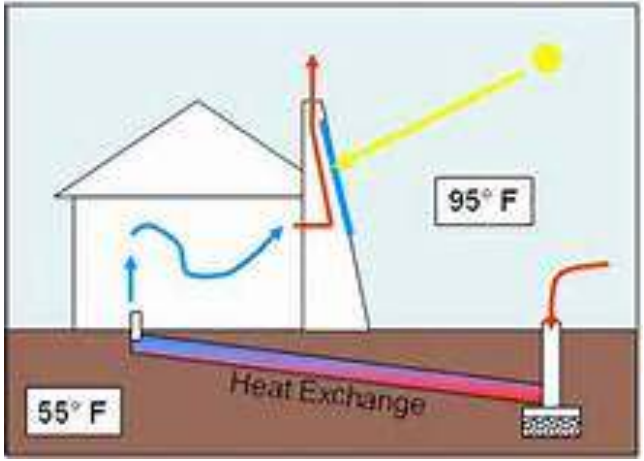

Four 5 inch diameter x 35 foot earth energy tubes buried 10 feet to permit air exchange

***Illustrates the differential in temperature of building and earth

Expected Outcome

- Four season green-house
- Increased harvesting for food donations
- Document off-grid renewable energy source
- Solutions for water, temperature and lights

Expected Outcome (Cont.)

- Shared results including system monitoring
- Model for replication
- Integrated learning experience
- Students real-life problem solving experience
- Mentor/facilitator inspired and motivated by students
- Planned future additional greenhouses on site

Energy Requirements

Assessing the Energy Needs

Irrigation : Pump water 117 feet from 5-1000 liter tanks

Lighting: LED lighting in Greenhouse

Cooling and Heating: Operate muffin fans in greenhouse

Security: Deer-cam to send images by email and to cellphone

Mesh Network: Mesh provides Wifi to members and telemetry information on humidity and temperature of greenhouse

Energy Load Calculations

Irrigation : Water Pump
Lighting: LED lighting
Cooling and Heating: Fans
Inverter: 24 Volt 400 Watts
Cell phone charging
Security: Deer-cam
Mesh Network: TP Link Modem

SOLAR SYSTEM

Components and Quantity

A solar or photovoltaic system incorporates all of these components. The solar panels generate power, the controller/regulator ensures the most efficient operation of the panels and prevents damage to the batteries. The battery stores collected energy. Inverters convert the stored energy from DC to AC

Pictures

https://www.flickr.com/photos/glennmcknight/albums/72157671682998095

FBSC.ORG
FOUNDATION FOR BUILDING
SUSTAINABLE COMMUNITIES

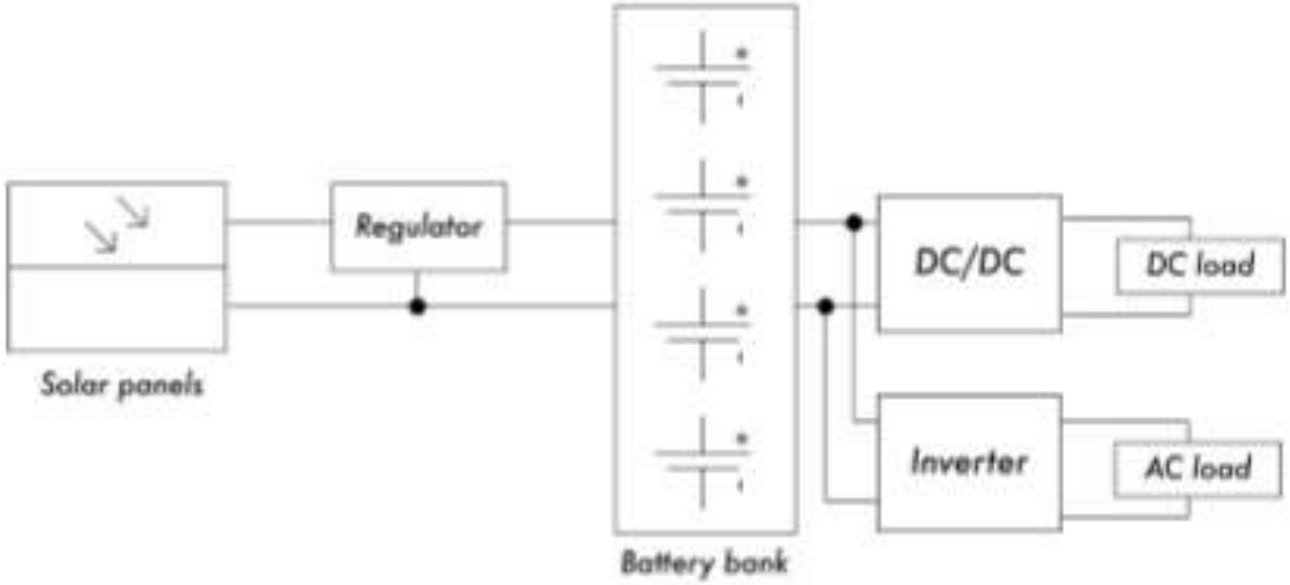
Regulator
DC/DC
DC load
Inverter
AC load
Solar panels
Battery bank

FBSC.ORG
FOUNDATION FOR BUILDING SUSTAINABLE COMMUNITIES

We decided to go with eight solar panels @ 60 watts each

Cell Type: Polycrystaline (A Class) 2) Voltage: 12 VDC 3) Dimension: 50*28*1 in 4) Rated power (Pmax): 100W (+/- 3%) 5) Open Circuit Voltage (Voc): 22.54V 6) Short Circuit Current (Isc): 5.64A 7) Max Power Voltage (Vmp): 18.72V 8) Max Power Current (Imp): 5.35A 9) Solar Panel Grade: A 10) Nominal Operating Cett Temperature: -40 to +85C 11) Maximum System Voltage: 750VDC 12)

Source: http://tinyurl.com/htdf45x

Sun YOBA 1 Pair Y Type PV Solar Panel Cable Connectors MC4 Male Female M/F Wire Branch Connectors

You need connectors to attach to your 12 AWG wire which connect to each of the panels. Alternatively you can use electrical wire connectors instead

Alternatively you can save money and make the wire connections with Butt Splice Crimp Connector, crimped together and coated with rubber sealant

$19 a pair

Source
https://www.amazon.ca/dp/B00BGJEQ6S/ref=pe_386430_201149710_TE_3p_dp_1

FBSC.ORG
FOUNDATION FOR BUILDING SUSTAINABLE COMMUNITIES

8 Volt Batteries, x 3 @160 Amp Hours each

BATTERY: Flooded/wet lead-acid battery

COLOR: Black (case/cover)

MATERIAL: Polypropylene

Source

http://tinyurl.com/z4whn3z

Intelligent 12V/24V 20A MPPT Solar Charge Controller Regulator With LCD Display For Solar Panel Power System 15%-20% Higher Efficiency Than PWM Solar Charge Controller

- Peak efficiency up to 97%, high tracking efficiency of 99%
- Maximum Power Point Track technology, 15%-20% higher than PWM model
- Four stage charging models:MPPT equalizing,charge boost, voltage charge,floating charge
- Various load control methods to improve the system's flexibility
- With Temperature compensation function to adjust charge and discharge parameters automatically, which could improve the life of battery

Price $95 US

http://tinyurl.com/jutagte

Schottky Diodes and Connecting Strips

	SR1045-TPMSCT-ND SR1045-TP	DIODE SCHOTTKY 45V 10A R6
	A98517-ND 1546670-5	CONN BARRIER STRIP 5CIRC 0.437"
	Q507-ND QLB-203-11B3N-3BA	CIR BRKR THRM 20A 250VAC 32VDC

Low Voltage Copper Landscape Electrical Cable □ 12/2 Black 150m

- Manufactured with two annealed, flexible, stranded copper conductors and premium-grade PVC insulation.
- Suitable for use at temperatures not exceeding minimum -20°C or maximum 60°C.
- Maximum voltage rating for all intended applications is 150 volts.
- Consult the most recent Canadian Electrical Code (CEC) or a licensed electrician for further information related to applications.

Cost

Source http://tinyurl.com/gv8booy

FBSC.ORG
FOUNDATION FOR BUILDING SUSTAINABLE COMMUNITIES

An inverter is connected to the batteries and permits conversion of DC to AC power

This unit is 24 volt inverter, 400 Watts and it allows for people to charge their cell phones and other devices

Cost $59 US

Source
http://www.dcacpowerinverters.com/

POWERBRIGHT

YOUR LEADER IN POWER SOLUTIONS

400 WATT 24VOLT

MODIFIED SINE WAVE

ONDE SINUSOÏDALE MODIFIÉE

POWER INVERTER / INVERSEUR DE COURANT

800 WATTS PEAK SURGE

800 WATTS TENSION AU DEMARRAGE MAXIMALE

SAMPLE CURRENT USES

Power Tools	AMPS	WATTS
Glue Gun	0.18	20
Buffer	0.7	77
Rotary Power Tool	1.15	126
Soldering Gun	1.20	132
Finishing Sander	1.60	176
5" Bench Grinder	1.64	180
Industrial Orbital Grinder	2.00	220
3/8" Drill	2.00	220
6" Bench Grinder	2.27	250
Jig Saw (1/4 HP)	2.50	275
Bench Grinder (Heavy Duty)	3.50	385
1/2" Reversible Drill	6.00	620
14" Chain Saw	10.00	1200

Audio/Video	AMPS	WATTS
HiFi Stereo 4-Head VCR	0.36	40
CD Changer/Mini System	0.55	60
9" Color TV/Radio/Cassette Combo	0.59	65
13" Color TV	0.65	72
20" TV/VCR Combo	1.00	110
27" Color TV	1.36	150
240 watt RMS Stereo Amplifier	2.27	250

Home Office	AMPS	WATTS
Laptop Computer	0.39	43
Fax	1.50	165

Pumps	AMPS	WATTS
1/5hp Pump	1.50	165
Upright Sump Pump	5.00	575
1/6hp Submersible Sump Pump	8.00	880
1/4hp Submersible Sump Pump	8.30	920
1/3hp Submersible Sump Pump	9.50	1060
1/2hp Submersible Sump Pump	12.00	1380

Appliances	AMPS	WATTS
Sewing Machine	0.90	99
100 Watt Halogen	0.91	100
Work light	2.10	231
12" 3-Speed Fan	2.27	250
Halogen Spotlight	2.91	320
Food Processor	4.50	525
Portable Vacuum Blender	4.82	530

Battery Chargers	AMPS	WATTS
7,2V Cordless Drill Charger	0.07	8
Camcorder (6V, 1200 mA)	0.21	23
Cellular Telephone	0.23	25
Cordless Saw (Fast Charger)	0.32	35

Grounding Plate- terminate bare copper ground wire into the earth

- Galvanized steel
- 10" x 16" x 1/4"

Connected to single strand of 12 AWG to the electrical panels

Cost:

Source
http://tinyurl.com/zbazdpk

Earth Energy- Fans

We have 10 .5 amp Muffin fans which will push hot air out of the greenhouse through the Closed loop Earth Energy manifold. In the winter month it pushes the warm air (earth temperature is 15C at 10 feet depth) Also extra fans are to be mounted at each end of the greenhouse

10 fans=$240CDN

http://tinyurl.com/zgr8ymn

Product Overview	
Digi-Key Part Number	1570-1131-ND
Quantity Available	**71** Can ship immediately
Manufacturer	Mechatronics Fan Group
Manufacturer Part Number	MD9238X24B-FSR
Description	FAN AXIAL 92X38MM 24VDC
Lead Free Status / RoHS Status	Lead free / RoHS Compliant
Moisture Sensitivity Level (MSL)	1 (Unlimited)

ZJchao Solar DC 12V 24V Hot Water Circulation Pump Brushless Motor Water

Submersible installation and entirely waterproof. DC 12V Hot/Cooling Water Circulation pump Inlet/Outlet: 1/2" male thead Voltage: 12V DCMaximum Rated Current: 500MA Max Flow Rate: 6.5 L/Min Max Water Head: 3 metre Max system pressure: 10Bar Max circulating water temperature: 100°C Low noise: 30db at 1 metre DC 24V Hot/Cooling Water Circulation pump Inlet/Outlet: 1/2" male thead Voltage: 24V DC Maximum Rated Current: 800MA Max Flow Rate: 10L/Min Max Water Head: 5 metre Max system pressure: 10Bar Max circulating water temperature: 100°C Low noise: 30db at 1 metre Package Content : 1 x 12V or 24V Hot/Cooling Water Circulation pump

Source $78 for two

http://tinyurl.com/jzhzzpw

Water Pump Demands

Expected to run 30 mins a day

- Connection will be provided outside the greenhouse
- Approximate flow rate of 8 liters a minute 2.11 gallons per minute
- DC motor with 24 V supply
- Water requirements 30-35 gallons per day only to greenhouse

Annt 2*27w Led Flood Light Headlight Work Light Flood Beam

27w High Power LED Light Source work on 12v 24v DC. (Input Voltage: 10-30V DC)

Cost: $29.99

http://tinyurl.com/jaggyxt

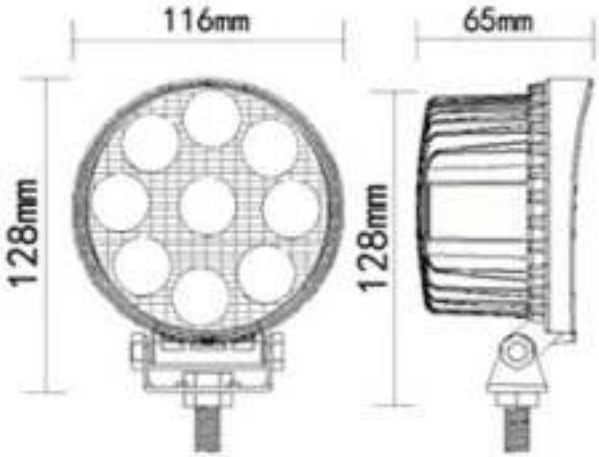

Deer Cam Security System

Series Wireless Cameras

Wireless Transmission

Two mile distance

Send message by phone or email

Optional Solar Power

http://tinyurl.com/hp6toht

Solar System
Step by Step Process

Pre-Build

Obtain funding for project

Source all materials for project

Organize volunteers

Solar Shed Structure

1. Orient structure- north-south (it's a fixed position) no sun tracking system
2. Drill four post holes, install sono tubes and concrete
3. Install post saddles
4. Erect 4 foot by 8 foot structure
5. Install cross braces for 43 degree angle for the placement of the

Solar System

1. Add to each panel two wires, one short 15 inch, and one 40 inches long
2. Connect the top and bottom panels
3. Wire each of the panels together then connect the wiring to the diodes
4. Diodes tied together then connected to battery
5. Three 8 volt batteries connected together
6. Wiring to the panel 4 15 amp breakers

Wiring

1. Trenching for wiring to DC water pump 120 feet to water tanks, buried enclosed in pipe and each connection sealed
2. Trenching to greenhouse 20 feet for power switch for lighting and fans
3. Wire to each of the 10 - .5 amp fans
4. Wire all the interior LED lighting in the Greenhouse

Extra Stuff

1. Install a large metal grounding plate and wired to panels plates
   All the metal screw heads sealed with liquid nails to prevent theft of the panels
   Ventilation holes cut into the box with the batteries
   Check water levels on batteries and added distilled water
   Install security camera

2. Learn more about solar installations visit http://wndw.net/pdf/wndw3-en/ch14-off-grid-power.pdf

Greenhouse Controls

1. Temperature and irrigation are controlled by a Raspberry Pi computer installed with custom Open Source Software and a bank of relays.

2. The system activates fans to pull cooler air in through the Earth Energy System as needed.

3. A gravity-fed drip-irrigation system provides water to plants as required through use of a solenoid valve connected to a locally installed reservoir.

Monitoring System

1. Sensors connected to the Raspberry Pi provide environmental monitoring.

2. Telemetry data is used to automatically determine optimal watering times and best time to cool the greenhouse.

3. Data including measurements and status of peripherals are recorded to a local SQLite database and can be downloaded for further analysis.

1. This design uses a Raspberry Pi 3 but any similar single-board computer can be used. The system itself and all recorded data can be accessed locally or remotely over Wifi, Mesh or ISP links.

2. Temperature sensor activates cooling fans.

3. Soil Moisture sensor reduces over-watering.

4. Relays control 24V devices.

The unit can be operated independently or linked with others to form community networks supporting wireless

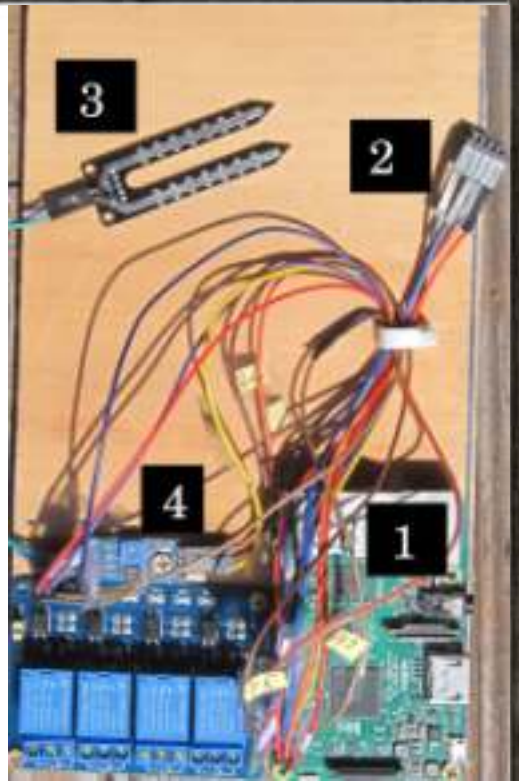

MESH Technology

Challenge

- Community WIFI System to provide Internet access to the local gardeners
- Collect telemetry data to transmit humidity and temperature of greenhouse

Distance to repeater at direct line of sight is 8 km

15km+

FBSC.ORG
FOUNDATION FOR BUILDING SUSTAINABLE COMMUNITIES

Point to Point Network

TP LINK CPE510
5GHz 300Mbps 13dBi Outdoor CPE, the CPE510 is dedicated to cost effective solutions for outdoor wireless networking applications.

LOAD- 11 watts

Instructions to configure
https://www.youtube.com/watch?v=ISUSlTcgWks

Step by Step

MESH TECHNOLOGY SOLUTION

TP Link Installations

1. Installation of 20 foot mast at garden
2. Connect CPE 510 to mast with RJ 45
3. Connect RJ 45 to power supply then plug into inverter
4. Do the same at repeater site
5. Configure system(see youtube video)

FBSC.ORG
FOUNDATION FOR BUILDING SUSTAINABLE COMMUNITIES

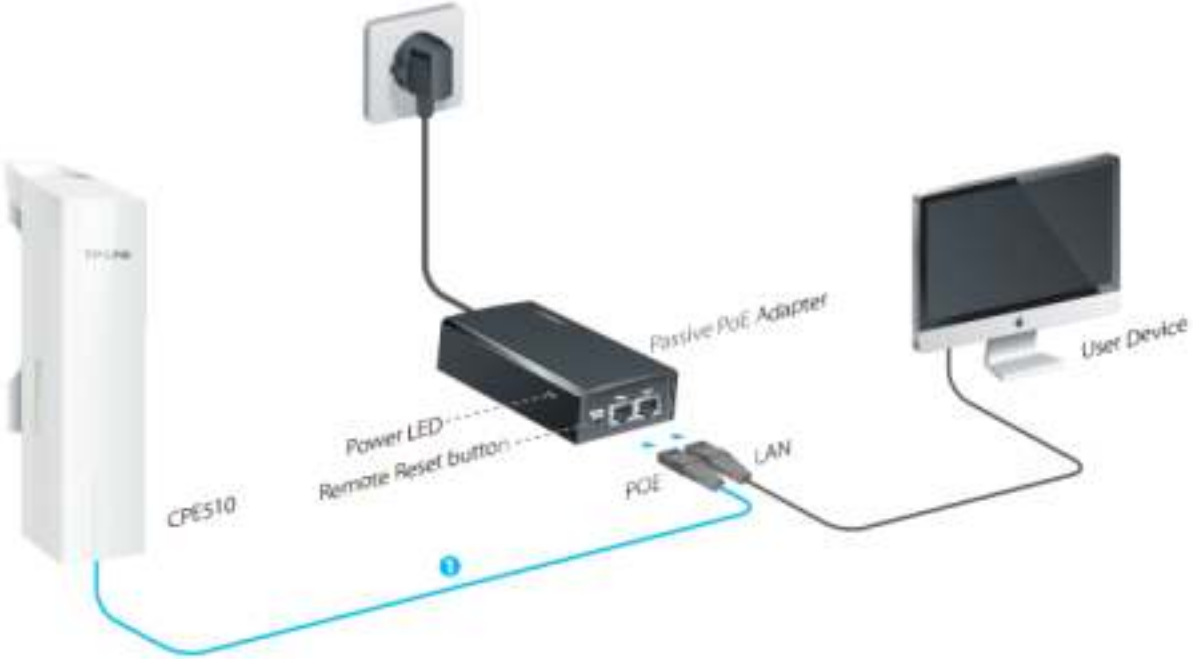

Cost Benefit

Cost
-Two 20 foot masts- $40
-Two 30 foot RJ 45 cables-donated
-Two TP Link -$215
-Internet service-donated from Amateur Radio Club Repeater

Total cost $260

Benefit
-Local community wifi

-Transmit telemetry information about greenhouse

-Low cost communication solution

Earth Energy System

Goal

The climatic conditions of the off the grid greenhouse produces swing temperatures. Too cold in the winter months and too hot in the summer

The goal is reduce the heat in months from May to Sept and increase the heat from Oct to April

Earth Energy Two trenches

- 4 feet wide
- 25 feet long
- 10 feet deep

Manifold made of 4 inch PVC and 1 inch Poly pipe connected together and with a U pipe connected to the greenhouse on both the intake & outflow. Intake is switchable

Two complete energy energy manifolds each at 25 feet each with a 4 inch PVC pipe connected with 20- 1 inch POLY pipes set at a depth of 10ft

This depth is necessary to cool the incoming air oC when the ambient air temperature is 30 to 27 f

Multiple pipes will offer increased surface area to provide increased convection.
Four, 5" muffin fans will be located in the greenhouse to pull air through the pipes.

The total airflow into the greenhouse will be 228 cfm.

This will allow for the changing of the entire volume of air in the greenhouse in approximately 28 minutes.

Energy Demands

Four 24 volt muffin fans operated in parallel operating at 200 millamps-.02 amps

4 fans draws 24 watts

28.8 amp/hours

Duration

Day time hours 7.2 hours

Night Time hours 16.8

PVC Pipe- 4 inch

$14.99 each- 10 feet x 4

http://tinyurl.com/hol7ugw

90 degree elbows and caps

Pipe-1 inch

IPEX Poly white stripe Landscape pipe

$114-300 feet x 2

http://tinyurl.com/hx6l4gj

Connectors

40 connectors x .81 cents each

Fans

4- 5 inch muffin fans x $24 each

Screening

Hose Clamps

40 clamps for $40

FBSC.ORG
FOUNDATION FOR BUILDING SUSTAINABLE COMMUNITIES

1. Remove debris from south side of 75 foot greenhouse
2. Excavate for two - 4 feet wide, 10 feet deep x 25 feet long manifolds
3. Assemble the manifolds drill and tap 20 1 inch connectors and connected to 1 inch Poly pipes to 4 inch PVC pipes
4. Install U- pipes into the greenhouse and install four muffins fans and wire to switch and then to breaker @ solar shed
5. Total volume of the greenhouse is 17 by 75 by 10 feet=12,750 cubic feet of air
6. Tidal air change in 28 minutes
7. Temperature change to be monitored

Cost Benefit Analysis

Item	Feature
Solar System	Providing lighting, charging station, pumping water to greenhouse, water spigot
Earth Energy	Lower summer temperature in Greenhouse and increase ambient temperature in winter
Mesh Network	Provide data transfer of greenhouse temperature and humidity, Community WIFI Internet access

Acknowledgements

We appreciate the financial support of the IEEE Power and Energy Society

The mentorship and guidance of Butch Shadwell
Mr. Robert Bell,
The volunteers from FBSC and UOIT engineering students

Contact

Glenn McKnight Technical Lead

IEEE Toronto Sight

glenn.mcknight@ieee.org

Joan Kerr Community partner

Foundation for Building Sustainable Communities (FBSC)
joankerr@fbsc.org